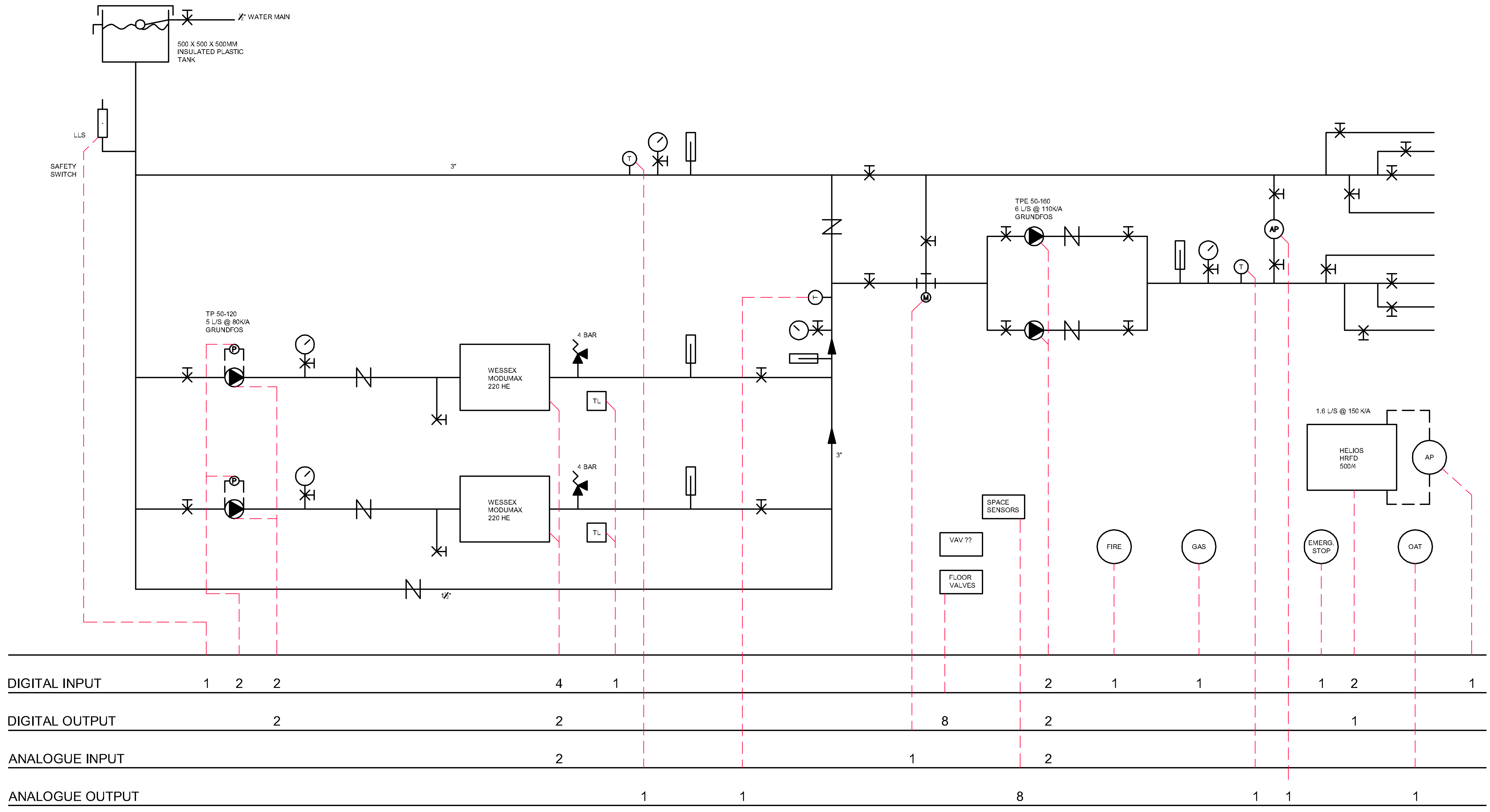

© COPYRIGHT NOTICE
THIS DRAWING MAY NOT BE COPIED (IN WHOLE OR IN PART), RETAINED OR DISCLOSED WITHOUT THE PRIOR WRITTEN CONSENT OF CINNABAR

DO NOT SCALE
NO DIMENSIONS SHOULD BE SCALED FROM THIS DRAWING.
CONTRACTORS MUST VERIFY ALL DIMENSIONS BEFORE STARTING WORK AND ANY DISCREPANCIES ARE TO BE REPORTED TO CINNABAR

DRAWING NO:	REVISION DATE:	REV:
SCH DWG 2		

DRAWN BY:	PROJECT NO:
GRW	

SCALE @ A4:	DATE:
NTS	

FLOOR
N/A

DRAWING TITLE
SCHEMATIC EXAMPLE 2

CLIENT
A CLIENT

BUILDING
A BUILDING
AN ADDRESS
AN ADDRESS
A COUNTY
AB12 3CD

Cinnabar
8 : White St : Kibworth Beauchamp :
Leicestershire : LE8 0JG
E : theoffice@cinnabar-cad.co.uk
W : www.cinnabar-cad.co.uk
T : 0116 2796605 M : 07808 732119